Kohl
light is life

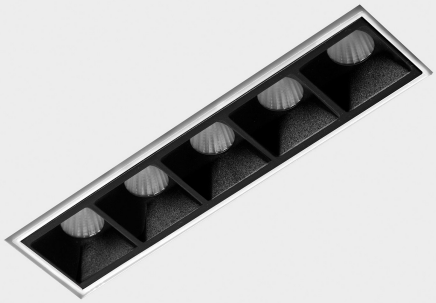

nses

K51300.02.TR.WH-BK.30.ST.9.30.PU

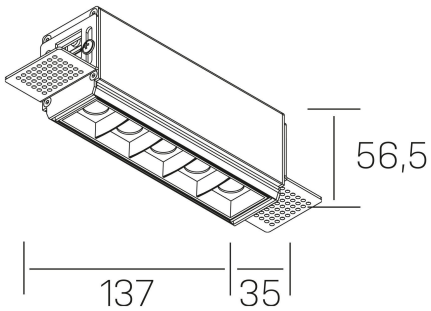

GENERAL DETAILS

INSTALLATION	Trimless
FINISHES ALUMINIUM	Black-White
LIGHT DIRECTION	Fixed
BEAM ANGLE	30°
INT/EXT IP DEGREE	IP20
MATERIAL	Aluminum
IK DEGREE	IK 6
UTILIZATION	Indoor
WARRANTY	3 years

ELECTRICAL DETAILS

LAMP	LED
POWER	10W
COLOUR TEMPERATURE	2700K
LUMINOUS FLUX	635 Lm
EFFICACY DIMMING	55 Lm/W
DIMABLE	Push
DRIVER	Remote
CLASS PROTECTION	II
COLOUR RENDERING INDEX	CRI>90
VOLTAGE	220-240 V
FRECUENCIA	50-60 Hz
CURRENT INTENSITY	700 mA
LIFE TIME	35.000 h

GENERAL DIMENSIONS

DIMENSIONS	137×35 mm
CUT OUT	143×70 mm
HEIGHT	h 56.5 mm
DIMENSIONES DE EMBALAJE	190 × 80 × 85 mm
PESO NETO	0.48

*Please might expect a max.15% figure reduction in finishes other than white