Kohl
light is life

versus

K51100.02.RF.WH-GC.38.ST.8.30.PU

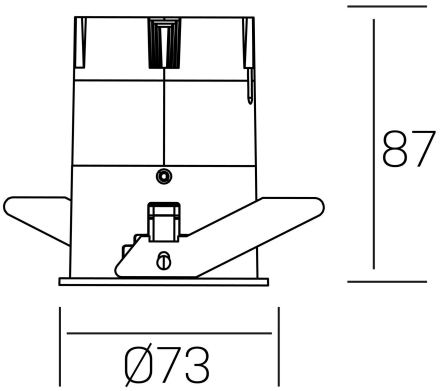

GENERAL DETAILS

INSTALLATION	recessed with frame
FINISHES ALUMINIUM	White-Gold Cava
LIGHT DIRECTION	Fixed
BEAM ANGLE	38°
INT/EXT IP DEGREE	IP 23
MATERIAL	Aluminum
IK DEGREE	IK03
UTILIZATION	Indoor
WARRANTY	3 years

ELECTRICAL DETAILS

LAMP	LED
POWER	10W
COLOUR TEMPERATURE	3000K
LUMINOUS FLUX	885 Lm
EFFICACY DIMMING	75 Lm/W
DIMABLE	Push
DRIVER	Remote
CLASS PROTECTION	II
COLOUR RENDERING INDEX	CRI >80
VOLTAGE	220-240 V
FRECUENCIA	50-60 Hz
CURRENT INTENSITY	250 mA
LIFE TIME	35.000 h

GENERAL DIMENSIONS

DIMENSIONS	Ø 73 mm
CUT OUT	Ø 66 mm
HEIGHT	h 87 mm
DIMENSIONES DE EMBALAJE	110 × 145 × 100 mm
PESO NETO	0.22

*Please might expect a max.15% figure reduction in finishes other than white