Kohl
light is life

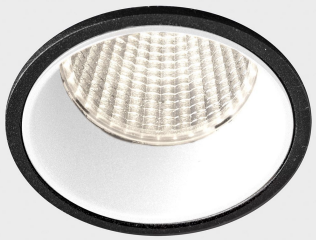

versus
K51100.01.RF.BK-WH.38.ST.8.40

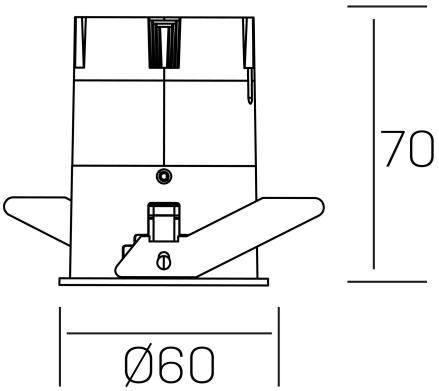

GENERAL DETAILS

INSTALLATION	recessed with frame
FINISHES ALUMINIUM	Black-White
LIGHT DIRECTION	Fixed
BEAM ANGLE	38°
INT/EXT IP DEGREE	IP 23
MATERIAL	Aluminum
IK DEGREE	IK03
UTILIZATION	Indoor
WARRANTY	3 years

ELECTRICAL DETAILS

LAMP	LED
POWER	5 W
COLOUR TEMPERATURE	4000K
LUMINOUS FLUX	420 lm
EFFICACY DIMMING	77 Lm/W
DIMABLE	No Dim
DRIVER	Remote
CLASS PROTECTION	II
COLOUR RENDERING INDEX	CRI >80
VOLTAGE	220-240 V
FRECUENCIA	50-60 Hz
CURRENT INTENSITY	120 mA
LIFE TIME	35.000 h

GENERAL DIMENSIONS

DIMENSIONS	Ø 60 mm
CUT OUT	Ø 55 mm
HEIGHT	h 70 mm
DIMENSIONES DE EMBALAJE	95 × 135 × 85 mm
PESO NETO	0.17

*Please might expect a max.15% figure reduction in finishes other than white