Kohl
light is life

# versus muzzy

K51101.01.RF.BK-BK.16.ST.9.40.D1

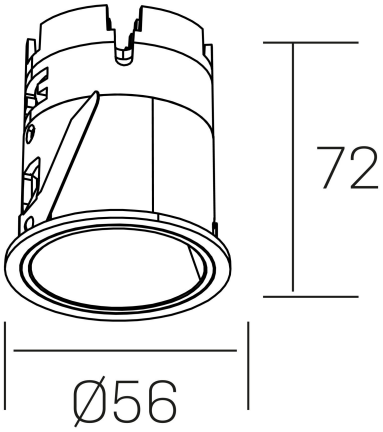


## GENERAL DETAILS

| | |
|---|---|
| INSTALLATION | recessed with frame |
| FINISHES ALUMINIUM | Black-Black |
| LIGHT DIRECTION | Fixed |
| BEAM ANGLE | 16° |
| INT/EXT IP DEGREE | IP20/33 |
| MATERIAL | Aluminum |
| IK DEGREE | IK05 |
| UTILIZATION | Indoor |
| WARRANTY | 3 years |

## ELECTRICAL DETAILS

| | |
|---|---|
| LAMP | LED |
| POWER | 9 W |
| COLOUR TEMPERATURE | 4000K |
| LUMINOUS FLUX | 575 Lm |
| EFFICACY DIMMING | 54 Lm/W |
| DIMABLE | 1.10v |
| DRIVER | Remote |
| CLASS PROTECTION | II |
| COLOUR RENDERING INDEX | CRI>90 |
| VOLTAGE | 220-240 V |
| FRECUENCIA | 50-60 Hz |
| CURRENT INTENSITY | 200 mA |
| LIFE TIME | 35.000 h |

## GENERAL DIMENSIONS

| | |
|---|---|
| DIMENSIONS | Ø 56mm |
| CUT OUT | Ø 48 mm |
| HEIGHT | h 72 mm |
| DIMENSIONES DE EMBALAJE | 83 × 80 × 115 mm |
| PESO NETO | 0.196 |

*Please might expect a max.15% figure reduction in finishes other than white