Kohl
light is life

nses

K51300.05.RF.WH-BK.15.ST.9.30.D1

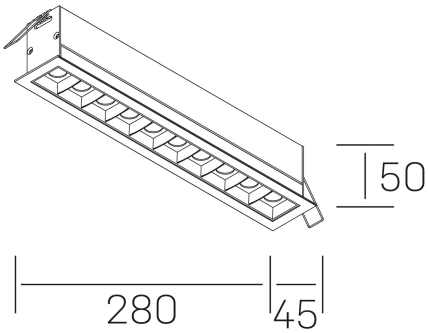

GENERAL DETAILS

INSTALLATION	recessed with frame
FINISHES ALUMINIUM	Black-White
LIGHT DIRECTION	Fixed
INT/EXT IP DEGREE	IP20/23
MATERIAL	Aluminum
IK DEGREE	IK 6
UTILIZATION	Indoor
WARRANTY	3 years

ELECTRICAL DETAILS

LAMP	LED
POWER	20 W
COLOUR TEMPERATURE	3000K
LUMINOUS FLUX	1280 Lm
EFFICACY DIMMING	64 Lm/W
DIMABLE	1.10v
DRIVER	Remote
CLASS PROTECTION	II
COLOUR RENDERING INDEX	CRI>90
VOLTAGE	220-240 V
FRECUENCIA	50-60 Hz
CURRENT INTENSITY	600 mA
LIFE TIME	35.000 h

GENERAL DIMENSIONS

DIMENSIONS	280×45 mm
CUT OUT	273×37 mm
DIMENSIONES DE EMBALAJE	325 × 80 × 85 mm
PESO NETO	0.60

*Please might expect a max.15% figure reduction in finishes other than white