# nses

K51300.02.RF.WH-BK.30.ST.9.40.DA

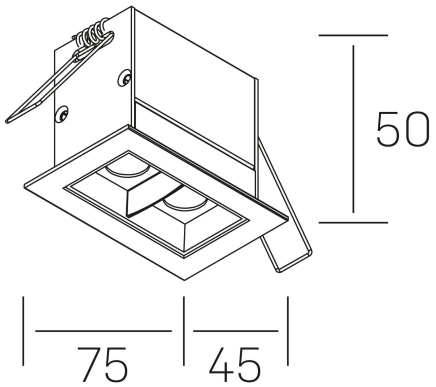


## GENERAL DETAILS

| | |
|---|---|
| INSTALLATION | recessed with frame |
| FINISHES ALUMINIUM | Black-White |
| LIGHT DIRECTION | Fixed |
| INT/EXT IP DEGREE | IP20/23 |
| MATERIAL | Aluminum |
| IK DEGREE | IK 6 |
| UTILIZATION | Indoor |
| WARRANTY | 3 years |

## ELECTRICAL DETAILS

| | |
|---|---|
| LAMP | LED |
| POWER | 4 W |
| COLOUR TEMPERATURE | 4000K |
| LUMINOUS FLUX | 290 Lm |
| EFFICACY DIMMING | 58 Lm/W |
| DIMABLE | DALI |
| DRIVER | Remote |
| CLASS PROTECTION | II |
| COLOUR RENDERING INDEX | CRI>90 |
| VOLTAGE | 220-240 V |
| FRECUENCIA | 50-60 Hz |
| CURRENT INTENSITY | 700 mA |
| LIFE TIME | 35.000 h |

## GENERAL DIMENSIONS

| | |
|---|---|
| DIMENSIONS | 75×45 mm |
| CUT OUT | 68×37 mm |
| DIMENSIONES DE EMBALAJE | 115 × 85 × 80 mm |
| PESO NETO | 0.18 |

*Please might expect a max.15% figure reduction in finishes other than white