Kohl
light is life

nses

K51300.02.RF.BK-BK.15.ST.9.40.DA

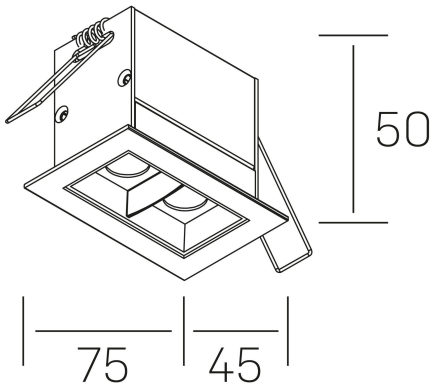

GENERAL DETAILS

INSTALLATION	recessed with frame
FINISHES ALUMINIUM	Black-Black
LIGHT DIRECTION	Fixed
INT/EXT IP DEGREE	IP20/23
MATERIAL	Aluminum
IK DEGREE	IK 6
UTILIZATION	Indoor
WARRANTY	3 years

ELECTRICAL DETAILS

LAMP	LED
POWER	4 W
COLOUR TEMPERATURE	4000K
LUMINOUS FLUX	290 Lm
EFFICACY DIMMING	58 Lm/W
DIMABLE	DALI
DRIVER	Remote
CLASS PROTECTION	II
COLOUR RENDERING INDEX	CRI>90
VOLTAGE	220-240 V
FRECUENCIA	50-60 Hz
CURRENT INTENSITY	700 mA
LIFE TIME	35.000 h

GENERAL DIMENSIONS

DIMENSIONS	75×45 mm
CUT OUT	68×37 mm
DIMENSIONES DE EMBALAJE	115 × 85 × 80 mm
PESO NETO	0.18

*Please might expect a max.15% figure reduction in finishes other than white