nses

K51300.05.RF.BK-BK.45.ST.9.27.D1

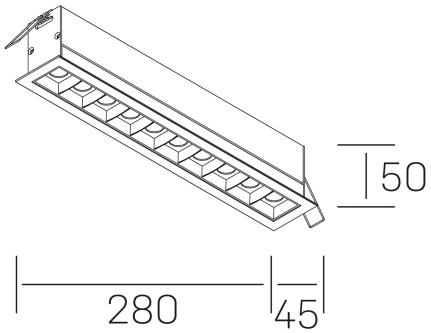

GENERAL DETAILS

INSTALLATION	recessed with frame
FINISHES ALUMINIUM	Black-Black
LIGHT DIRECTION	Fixed
INT/EXT IP DEGREE	IP20/23
MATERIAL	Aluminum
IK DEGREE	IK 6
UTILIZATION	Indoor
WARRANTY	3 years

ELECTRICAL DETAILS

LAMP	LED
POWER	20 W
COLOUR TEMPERATURE	2700K
LUMINOUS FLUX	1250 Lm
EFFICACY DIMMING	63 Lm/W
DIMABLE	1.10v
DRIVER	Remote
CLASS PROTECTION	II
COLOUR RENDERING INDEX	CRI>90
VOLTAGE	220-240 V
FRECUENCIA	50-60 Hz
CURRENT INTENSITY	600 mA
LIFE TIME	35.000 h

GENERAL DIMENSIONS

DIMENSIONS	280×45 mm
CUT OUT	273×37 mm
DIMENSIONES DE EMBALAJE	325 × 80 × 85 mm
PESO NETO	0.60

*Please might expect a max.15% figure reduction in finishes other than white

Partida Madrigueres Sud 63A, Naves1-4, 03700 Dénia · Alicante (Spain) | Tel. 0034 96 575 3083 · info@kohl-lighting.com · www. kohl-lighting.com