Kohl
light is life

noon sq

K50805.01.RF.WH-WH.38.ST.8.30.PU

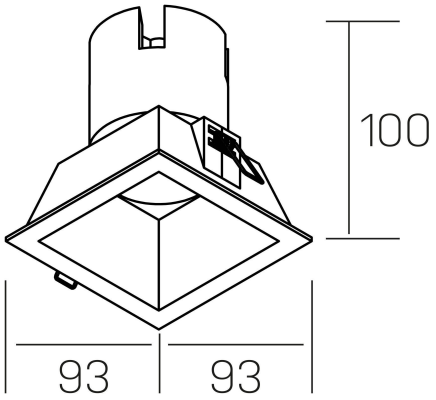

GENERAL DETAILS

INSTALLATION	recessed with frame
FINISHES ALUMINIUM	White-White
LIGHT DIRECTION	Fixed
BEAM ANGLE	38°
INT/EXT IP DEGREE	IP 23
MATERIAL	Aluminio/Policarbonato
IK DEGREE	IK03
UTILIZATION	Indoor
WARRANTY	3 years

ELECTRICAL DETAILS

LAMP	LED
POWER	10W
COLOUR TEMPERATURE	3000K
LUMINOUS FLUX	900 lm
EFFICACY DIMMING	86 Lm/W
DIMABLE	Push
DRIVER	Remote
CLASS PROTECTION	II
COLOUR RENDERING INDEX	CRI >80
VOLTAGE	220-240 V
FRECUENCIA	50-60 Hz
CURRENT INTENSITY	250 mA
LIFE TIME	35.000 h

GENERAL DIMENSIONS

DIMENSIONS	93×93 mm
CUT OUT	85×85 mm
HEIGHT	h 100 mm
DIMENSIONES DE EMBALAJE	110 × 105 × 120 mm
PESO NETO	0.25

*Please might expect a max.15% figure reduction in finishes other than white