Kohl
light is life

luxo IP65

K50153.01.RF.WH-WH.38.ST.9.40.DA

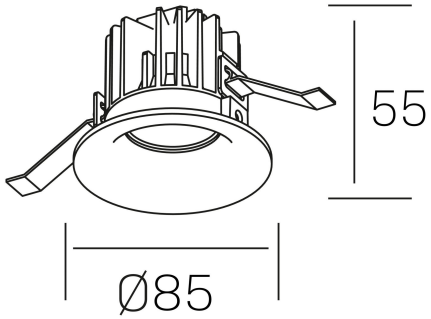

GENERAL DETAILS

INSTALLATION	recessed with frame
FINISHES ALUMINIUM	White-White
LIGHT DIRECTION	Fixed
BEAM ANGLE	15°, 25º, 38°, 60°
INT/EXT IP DEGREE	IP 65
MATERIAL	Aluminum
IK DEGREE	IK05
UTILIZATION	Indoor
WARRANTY	3 years

ELECTRICAL DETAILS

LAMP	LED
POWER	12 W
COLOUR TEMPERATURE	4000K
LUMINOUS FLUX	1100 lm
EFFICACY DIMMING	88 Lm/W
DIMABLE	DALI
DRIVER	Remote
CLASS PROTECTION	II
COLOUR RENDERING INDEX	CRI>90
VOLTAGE	220-240 V
FRECUENCIA	50-60 Hz
CURRENT INTENSITY	300 mA
LIFE TIME	35.000 h

GENERAL DIMENSIONS

DIMENSIONS	Ø 85 mm
CUT OUT	Ø 76 mm
HEIGHT	h 55 mm
DIMENSIONES DE EMBALAJE	100 × 100 × 100 mm
PESO NETO	0.34

*Please might expect a max.15% figure reduction in finishes other than white