Kohl
light is life

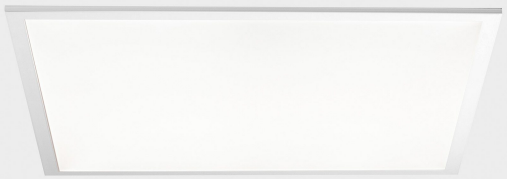

chess de k-select

K50515.01.RF.WH-WH.MP.ST.8.01.DA

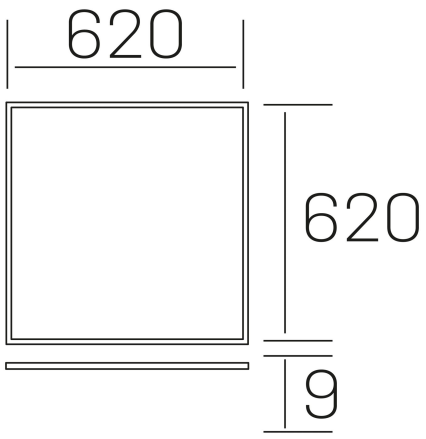

GENERAL DETAILS

INSTALLATION	recessed with frame
FINISHES ALUMINIUM	White-White
OPTIC COVER	Microprismatico
LIGHT DIRECTION	Fixed
INT/EXT IP DEGREE	IP 23
MATERIAL	Aluminum
IK DEGREE	IK03
UTILIZATION	Indoor
WARRANTY	3 years

ELECTRICAL DETAILS

LAMP	LED
POWER	40 W
COLOUR TEMPERATURE	3CCT 3000K-4000K-6000K
LUMINOUS FLUX	3450-3850-3650 Lm
DIMABLE	DALI
DRIVER	Remote
CLASS PROTECTION	II
COLOUR RENDERING INDEX	CRI >80
VOLTAGE	220-240 V
FRECUENCIA	50-60 Hz
CURRENT INTENSITY	1000 mA
LIFE TIME	35.000 h

GENERAL DIMENSIONS

DIMENSIONS	620×620 mm
CUT OUT	620×620 mm
HEIGHT	h 9 mm
DIMENSIONES DE EMBALAJE	685 × 685 × 35 mm
PESO NETO	3.25

*Please might expect a max.15% figure reduction in finishes other than white